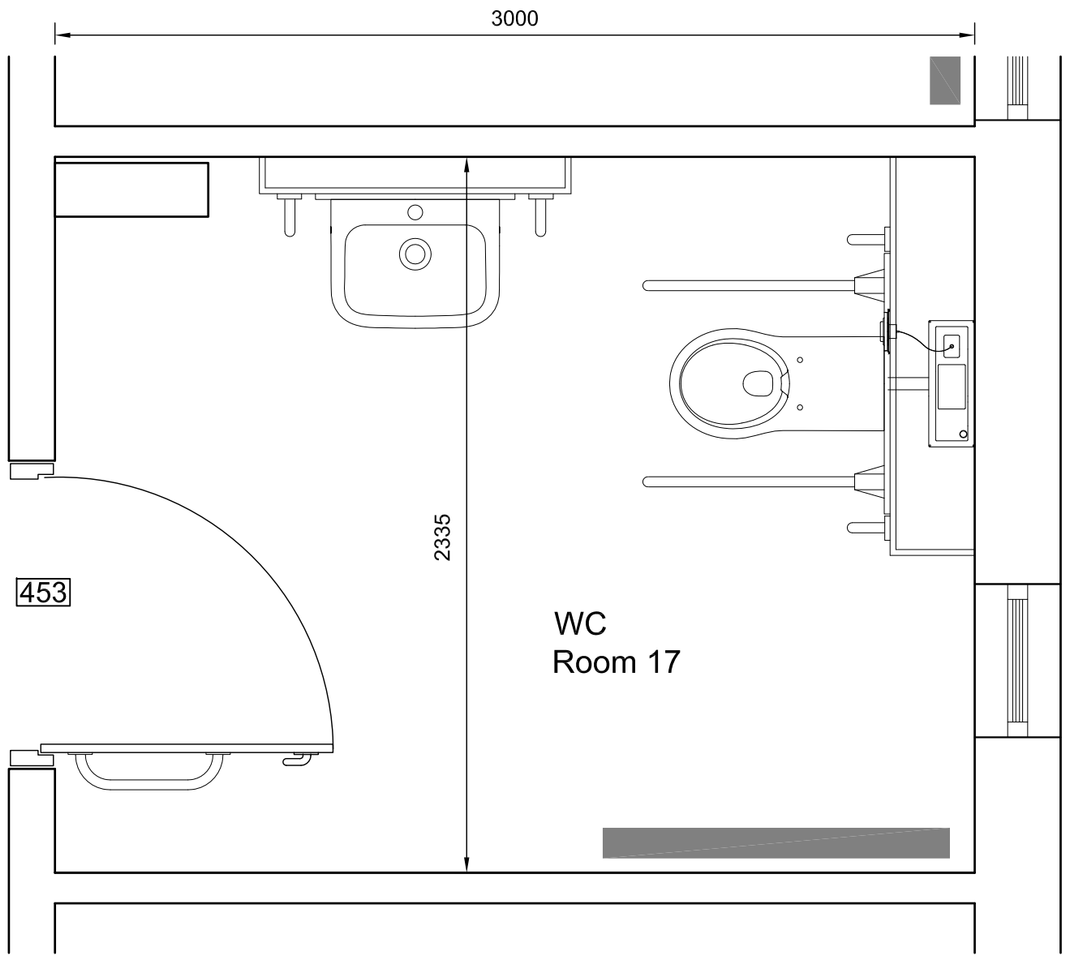

Room 17 WC Layout
1:20

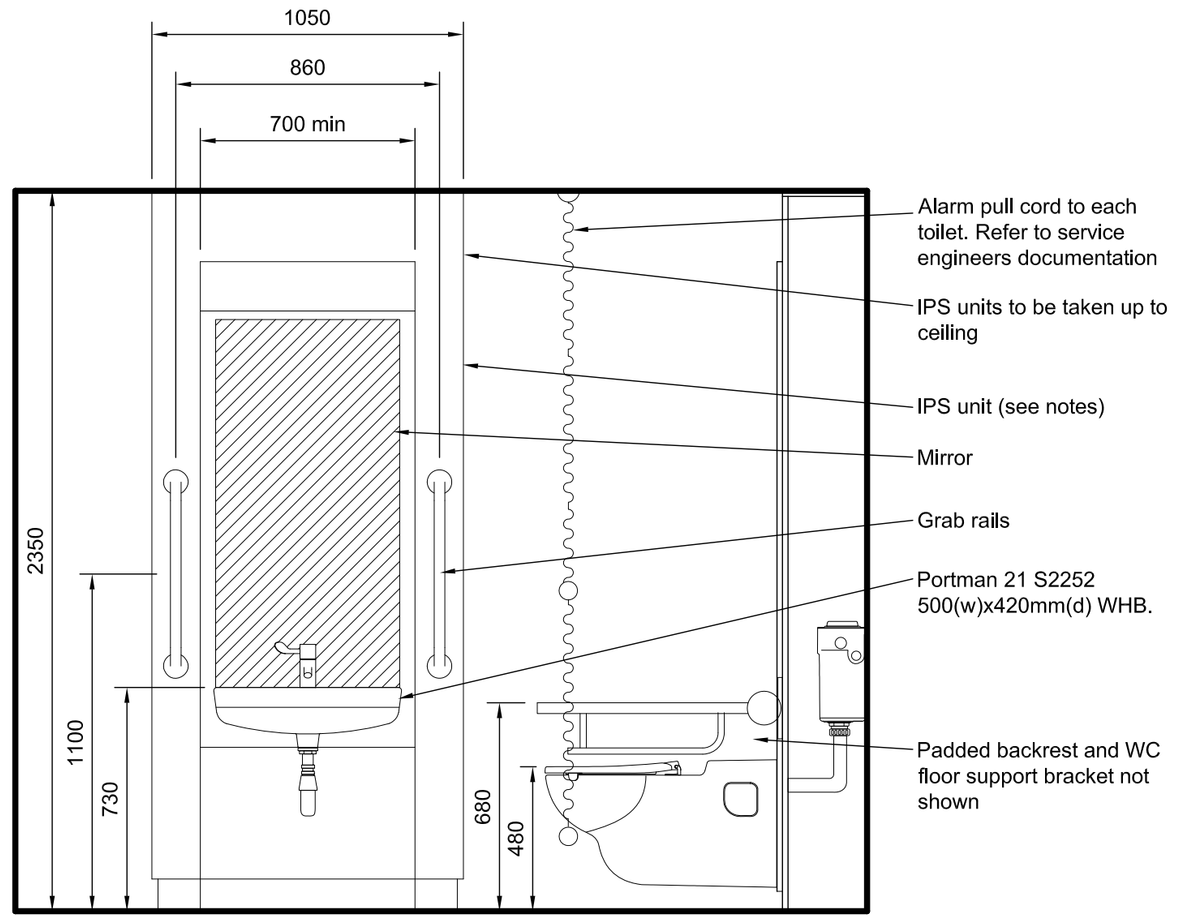

Room 17 WHB Elevation
1:20

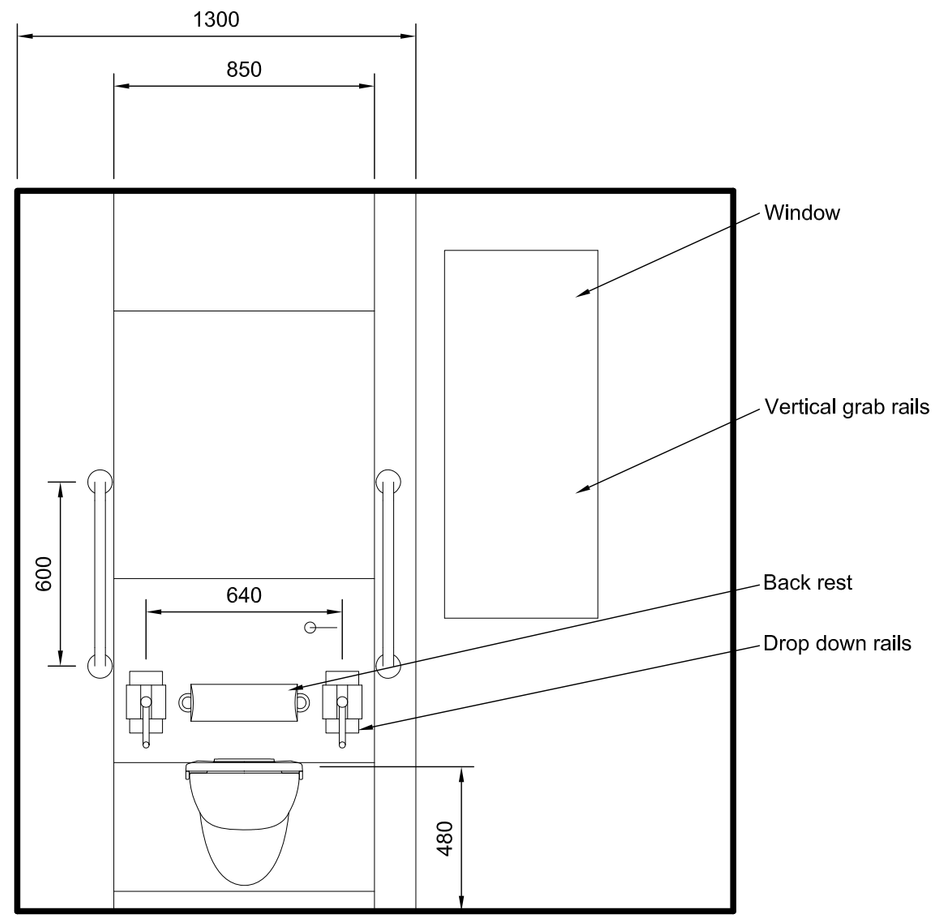

Room 17 WC Elevation
1:20

REFER TO DRAWING NO 1006 FOR SANITARYWARE SCHEDULE, NOTES AND WALL CLADDING DETAILS.

NOTE: Refer to Service Engineers' documentation and drawings for details of mechanical and electrical items.

NOTE: CONTRACTORS ARE TO ARRANGE TO INSPECT SITE AT TENDERING STAGE

0 1M

500mm 2M

Refer to Drawing	
Builder's Compound & Access Plan.	1001
Demolitions, Ceiling Heights, Section.	1002
New Works Plan	1003
Nurses' Station	1004
Office Room 8	1005
WC Room 13	1006
WC Room 17	1007
Door & Ironmongery Schedules	1008
Resident's Dining Room 11 & Linen Room 14	1009
Staff Rooms 5 & 5A	1010
Kitchen	1011

General Notes :

1. Do not scale from this drawing. Use figured dimensions only.
2. This drawing is to be read in conjunction with all relevant specifications and drawings.
3. All dimensions to be checked on site prior to fabrication.
4. In the event of any discrepancies between drawings or any other issued documentation the contractor is to inform the architect immediately.
5. Contractor not to order door, windows or material before sample of each element has been approved by architect.
6. Contractor to submit quality certification before manufacturer of elements.

ISSUED FOR TENDER

CLIENT: HSE
PROJECT: Refurbishment Works to Willow Unit at St Josephs Hospital, Ennis, Co Clare
TITLE: WC Room 17

Code	Originator	Zone	level	Type	Role	Number	Status	Revision
2825	HLA	ZZ	00	DR	A	1007		

SCALE: 1:20 A2 DATE: Oct 2026 DRW BY: JMK APP BY:

HASSETT LEYDEN ASSOCIATES
ARCHITECTS & CIVIL ENGINEERS
ROSLEVAN SHOPPING CENTRE
TULLA ROAD, ENNIS, CO. CLARE
Tel: 065-6828422 (V95 YN93)